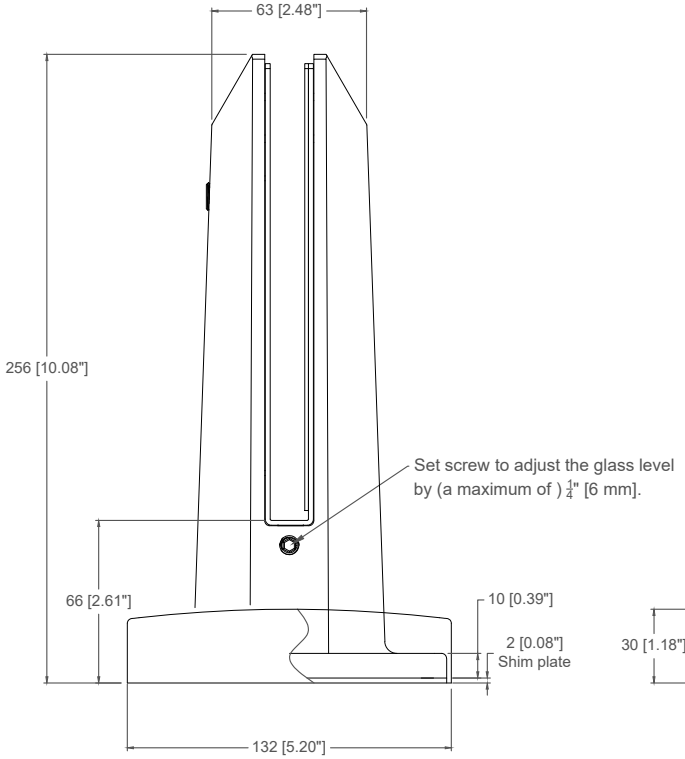
63 [2.48"]
256 [10.08"]
Set screw to adjust the glass level
by (a maximum of) ¼" [6 mm].
66 [2.61"]
10 [0.39"]
2 [0.08"]
Shim plate
132 [5.20"]

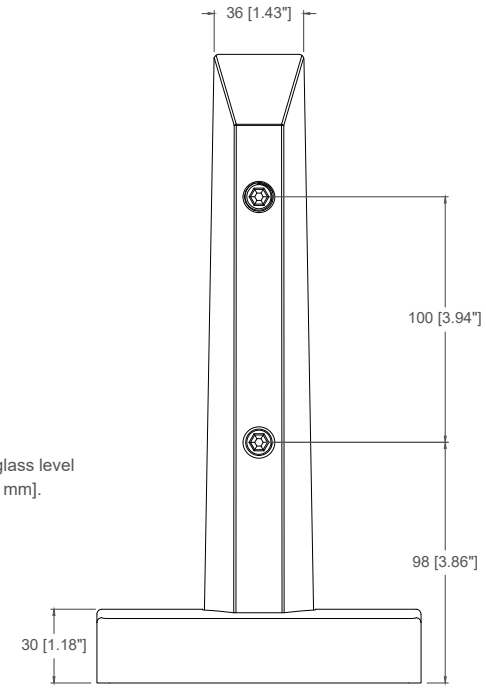
36 [1.43"]
100 [3.94"]
98 [3.86"]
30 [1.18"]

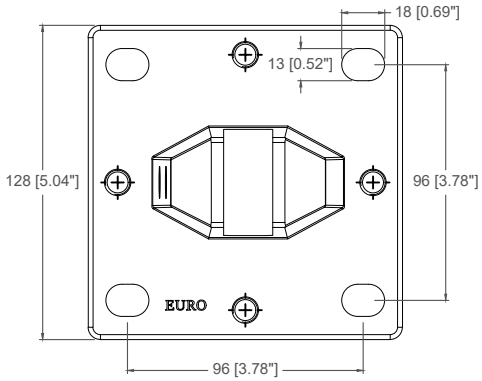
18 [0.69"]
13 [0.52"]
128 [5.04"]
96 [3.78"]
EURO
96 [3.78"]

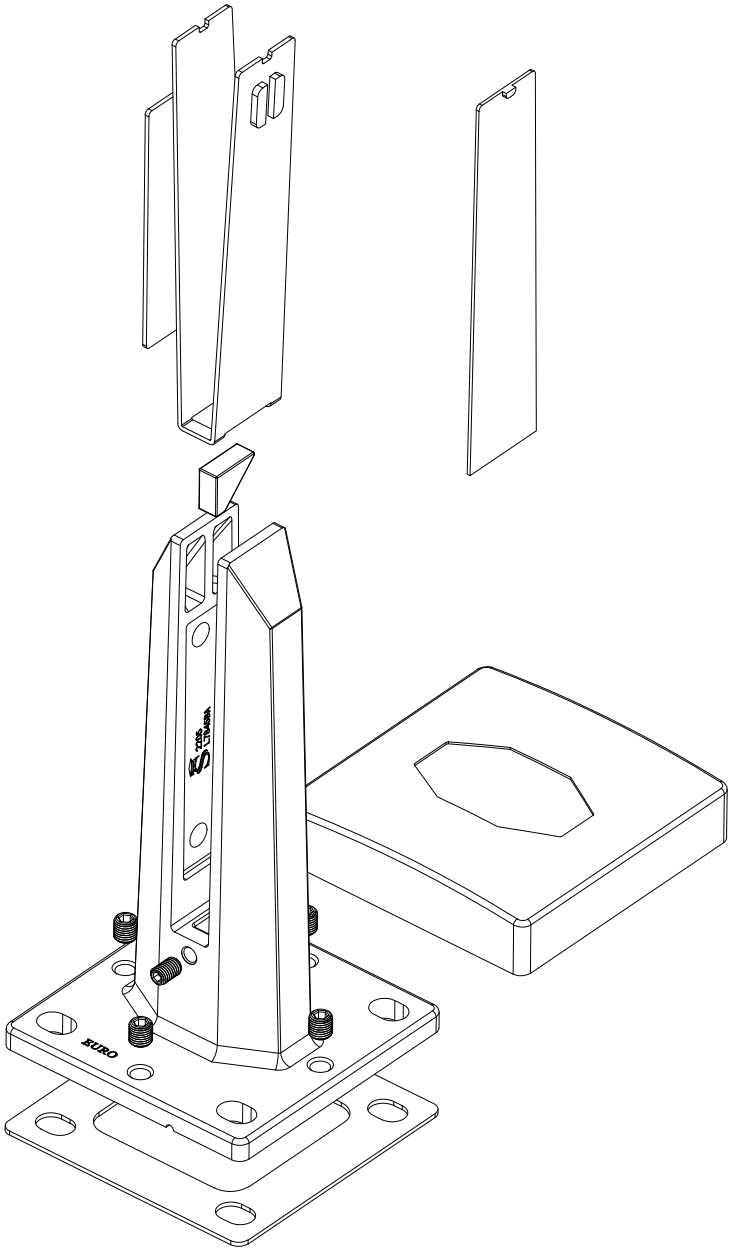
EURO